Frameless mirror, *made to measure.*

A preview of the mirror you have designed: its size, shape and finish, how it hangs, and what your installer needs. Share it with your builder or designer. When you order, we send the final set to approve.

SHAPE AND SIZE	Arch, 600 x 900 mm
GLASS	6 mm Silver Mirror
EDGE	polished
HANGING	Split batten
QUANTITY	1
DRAWN	27/10/2026

BEFORE YOU ORDER, CHECK

01 The overall size against your wall or cabinet, and the shape.
02 The glass and the finish are what you chose.
03 The mirror top height is yours to set; everything is measured from it.

IN THIS PACKAGE

01 Your mirror
Cover and contents

02 Front and side
Elevations

03 The back
Hanging and light

04 What it is made of
Parts and approval

05 On the wall
Setout for the installer

06 Fitting it
Installation notes

07 What happens next
Approval, making, delivery, care

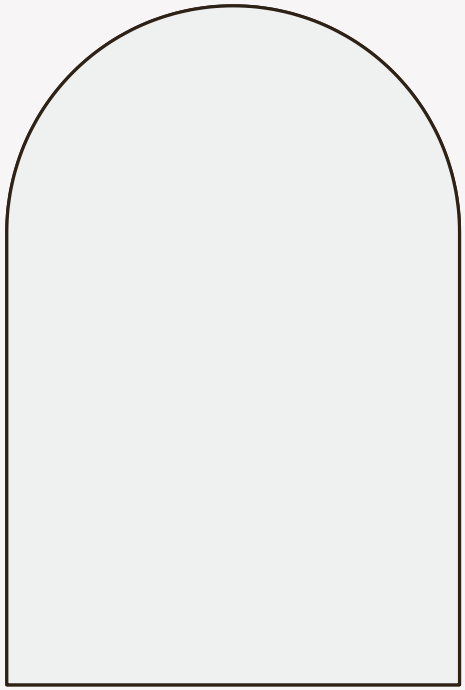

ARCH | 600 x 900 | not to scale

Front and side

Frameless mirror | Arch | 600 x 900 mm

Design preview | 27/10/2026

Design preview | not an order

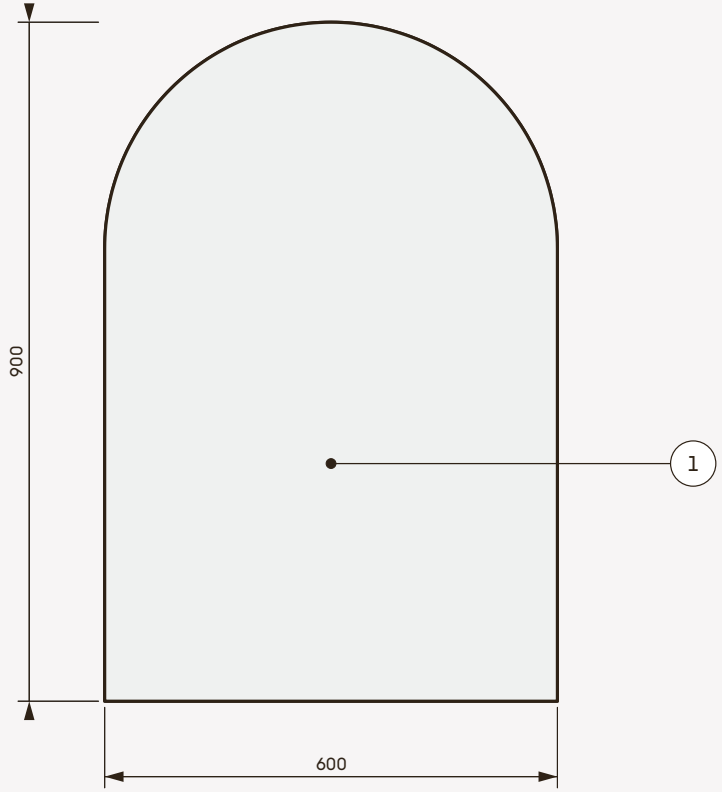

FRONT VIEW

scale 1:10

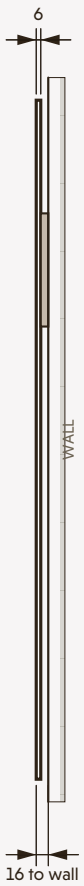

SIDE VIEW

scale 1:10

ITEMS SHOWN

01 Mirror glass
02 Split batten, mirror half
03 Split batten, wall half

READ THIS SHEET

Overall 600 x 900 is the finished face.
Frameless: the glass is the overall size.

Side view: 16 off the wall.

Sizes and materials of every item are on TFP-PREVIEW-C3.

The back

Frameless mirror | Arch | 600 x 900 mm

Design preview | 27/10/2026

Design preview | not an order

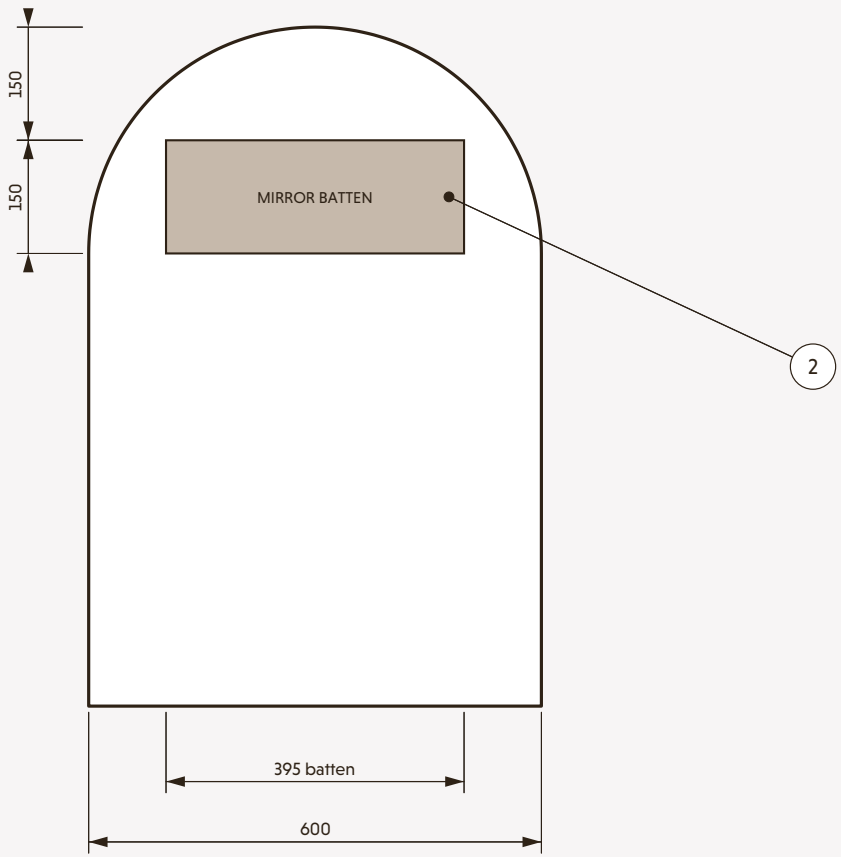

BACK VIEW

scale 1:10 | seen from the wall side

ITEMS SHOWN

01 Mirror glass
02 Split batten, mirror half
03 Split batten, wall half

WHAT THIS SHOWS

The mirror hangs on a split batten: one half is fixed to the back of the mirror, the other to your wall.

What it is made of

NO.	PART	DESCRIPTION	QTY	MATERIAL
01	Mirror glass	600 x 900 x 6 mm, polished edge	1	6 mm Silver Mirror
02	Split batten, mirror half	395 x 75 x 10, centred between the edges at that height, top 150 below the top edge	1	PVC
03	Split batten, wall half	395 x 75 x 10, supplied loose for the installer	1	PVC

NOTES

01 Sizes are finished sizes in millimetres. Check them against your space before approving.

02 Overall 600 x 900 is the face you see; the glass is 600 x 900, 6 mm thick.

03 The wall half of the split batten comes loose with the mirror; its setout is on TFP-PREVIEW-C4.

04 A change after approval starts a new revision.

APPROVAL COMES WITH YOUR ORDER

This is a preview of the design you chose. When you order, we send this set with your order number for you to check and approve. Nothing is made until you do.

On the wall

Frameless mirror | Arch | 600 x 900 mm

Design preview | 27/10/2026

Design preview | not an order

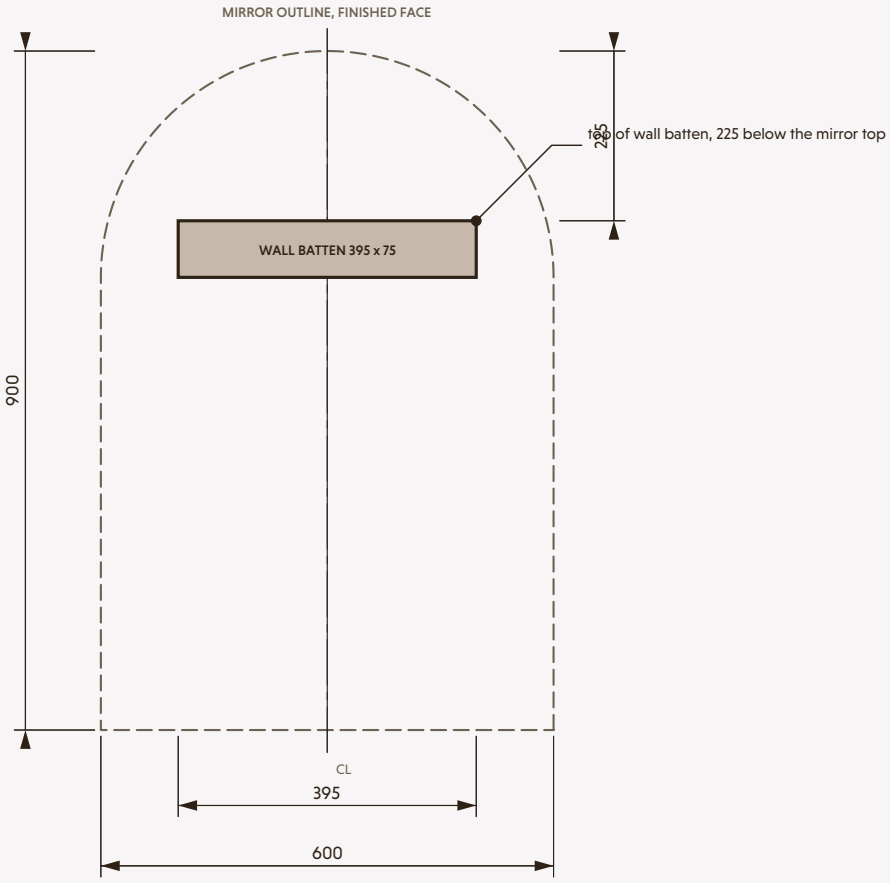

WALL SETOUT

scale 1:10 | viewed from the room; mirror top height per site

FOR THE INSTALLER

Wall half of the split batten: top edge 225 below the finished top of the mirror, centred between the edges at that height.

The mirror top height is the client's choice; set everything out from it.

Fitting it

FOR THE BUILDER

01 Wall batten fixings for about 11.1 kg: into studs or noggins, or masonry anchors. Plasterboard alone is not enough.

02 Finished wall flat within 2 mm over the batten length. The mirror stands 10 off the wall.

INSTALLATION STEPS

01 Mark the mirror outline and centreline on the wall at the agreed height.

02 Fix the wall half of the split batten level, its top edge 225 below the mirror top and centred, bevel facing up and out.

03 Lift the mirror and lower its batten onto the wall batten; it seats with a firm stop.

04 Check level and the gap to the wall all round.

05 Remove the protective film. Clean with a soft cloth and cleaner sprayed on the cloth, never at the edge.

HANDOVER CHECK

01 Mirror level and tight to the wall, no rock.

02 Hanging hardware hidden behind the mirror.

03 Finish undamaged; care instructions handed over.

SUPPLIED LOOSE WITH THE MIRROR

03 Split batten, wall half: 395 x 75 x 10, supplied loose for the installer

CARE

01 Clean with a soft cloth and glass cleaner sprayed on the cloth, never at the edge.

02 Do not let water sit on the bottom edge; wipe it after showers.

03 Keep the back ventilated; nothing should be packed behind the mirror.

What happens next

01 You order

Order online or ask us for a quote. We then send this set with your order number to approve; nothing is cut until you do.

02 We make it

Glass, frame and fittings are made in our Sydney workshop to these drawings; every part is checked against them before packing.

03 Delivery or collection

We confirm a date once the piece is through the workshop. It travels with the loose items listed on TFP-PREVIEW-C5.

04 Fitting

Your installer works from TFP-PREVIEW-C4 and TFP-PREVIEW-C5. If anything on site differs from the drawing, call us before fixing anything.

05 Living with it

Clean with a soft cloth and cleaner sprayed on the cloth, never at the edge. Keep the back ventilated.

ONE SET OF DRAWINGS

Every sheet in this package is drawn from the same record of your order, so the sizes on one page always match the others. If we change anything after you approve, the whole set is reissued with a new revision number.

TALK TO US

The Framing Project

Matraville NSW
sales@theframingproject.com.au
(02) 9690 2311
www.theframingproject.com.au

YOUR REFERENCE

Design preview | 27/10/2026

Tell us the shape, size and finish when you call.